Earthway Products, Inc.
P.O. Box 547
Bristol, Indiana 46507
Phone: 800-294-0671 or
(574) 848-7491
www.earthway.com

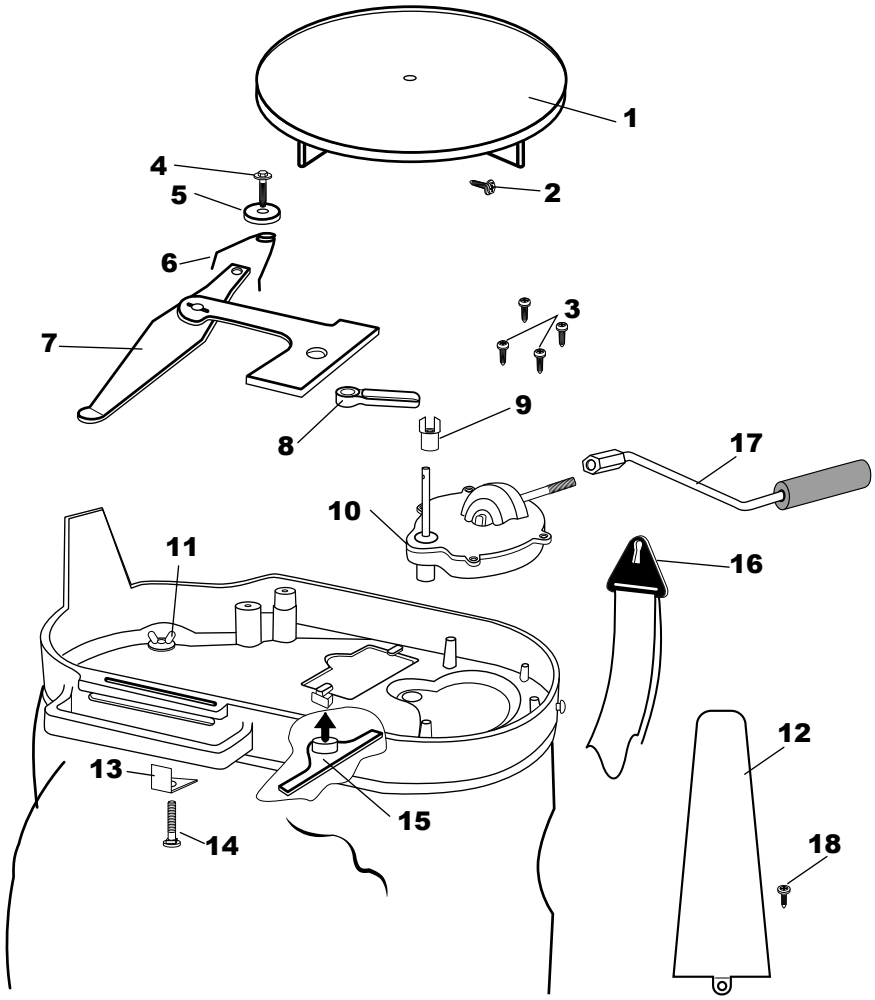

2750 BAG SEEDER - Parts List

KEY #	PART #	DESCRIPTION
1	12109	IMPELLER (9" DIA)
2	31103	#6 X 1/2" HWHS SCREW
3	31113	#6 X 5/8" PHPS SCREW
4	31152	#6 X 1 UNSHW SCREW
5	43029	TORSION WASHER
6	70117	TORSION SPRING
7	12330	LEVER & PLATE
8	12331	SHUTTLE
9	12329	CAM
10	60411	GEAR CASE ASSEMBLY
11	32106	10-24 WING NUT
12	12189	BAG SUPPORT
13	12334	INDICATOR
14	37103	#10-24 X 3/4" CARRIAGE BOLT
15	12327	AGITATOR
16	12328	STRAP HOOK
17	60117	HAND CRANK ASSEMBLY
18	31138	#8 X 3/8" PMT SCREW

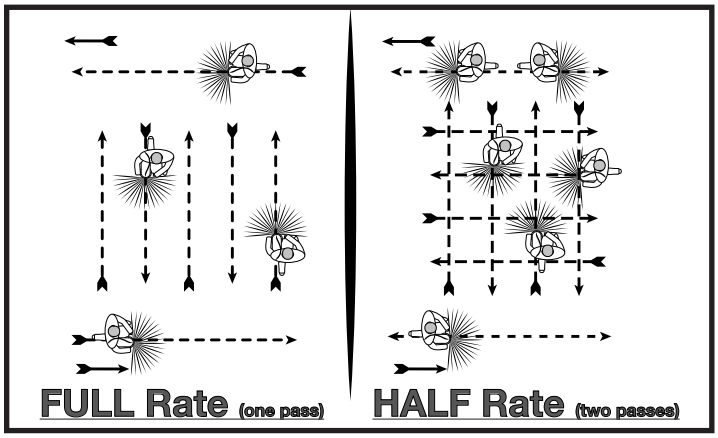

FIELD SEED	SPREAD WIDTH	SETTING RATE	LBS. PER ACRE
Alfalfa	18	2 ½	20
Kentucky 31	11	3 ½	5
Birdsfoot Trefoil	20	1 ¾	4
Clovers	18	2.25	8
Flax or Millet	18	2 ½	25
Hairy Vetch	18	3 ½	20
Kentucky Blue Grass	8	3 ½	49 ½
Lespedeza Unhulled	16	2	15
Lespedeza Hulled	16	2	12
Oats	16	6	64
Orchard Grass	10	2 ½	14
Red Top	10	1 ½	6
Imperial White Tall Clover	18	1 ¾	8

FIELD SEED	SPREAD WIDTH	SETTING RATE	LBS. PER ACRE
Rape	21	2 ½	6 ¾
Sweet Sudan Grass	24	3 ¾	25
Timothy	14	1	2 ¾
Wheat	25	4 ½	90
Yellow Mustard	20	2 ½	7 2/3

LAWN SEED	SPREAD WIDTH	SETTING RATE	LBS. PER 1,000 SQ. FT.
Bermuda	7 ½	1	2 ¼
Merlon Blue	7 ½	2 ½	¼
Rye Grass	13	4 ½	1
Fine Seed Mixtures	10	3 ½	4
Coarse Seed Mixtures	12	4 ½	1